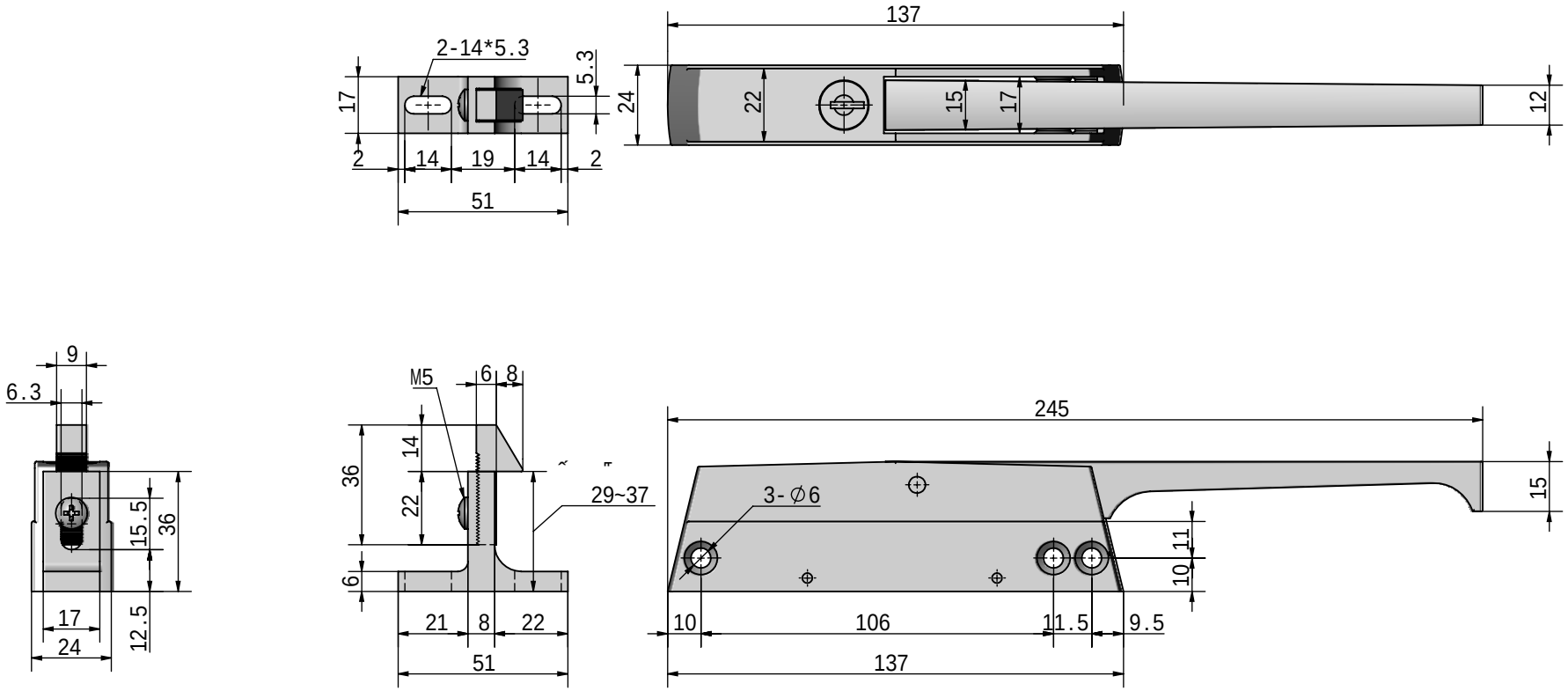
2-14*5.3
5.3
17
2
14
19
14
2
51
137
24
22
15
17
12
9
6.3
15.5
36
17
24
12.5
M5
6
8
14
36
22
29~37
6
21
8
22
51
245
3-∅6
15
11
10
10
106
11.5
9.5
137

1:2		
SK1-1240		
‡		