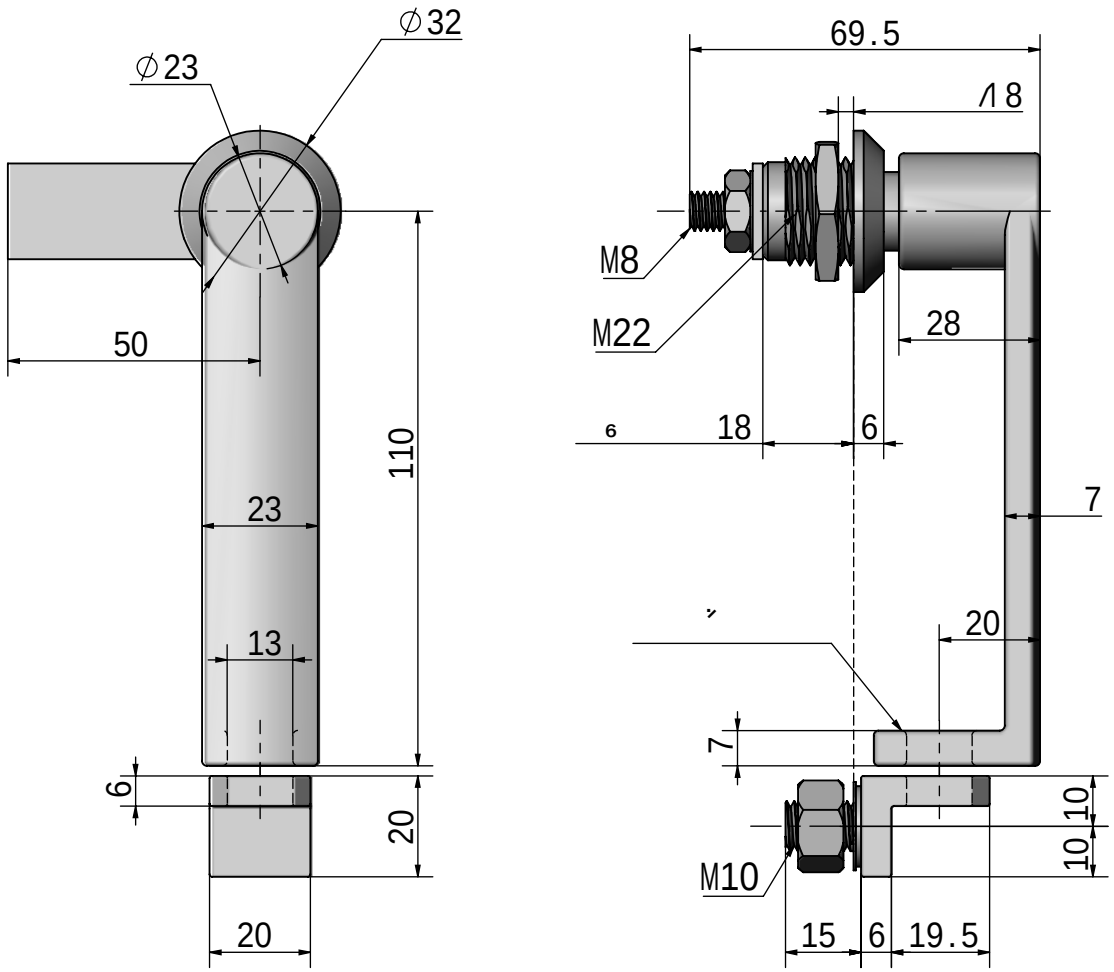
∅32
∅23
50
110
23
13
6
20
20
69.5
18
M8
M22
28
18
6
7
20
7
10
10
M10
15
6
19.5

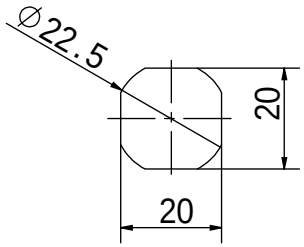
∅22.5
20
20

1:1.5		
SK1-091		